The Omni-Directional Treadmill: A Locomotion Device for Virtual Worlds

Rudolph P. Darken
William R. Cockayne
Department of Computer Science
Naval Postgraduate School
Monterey, CA 93943-5118
+1 408 656 4072
{ darken, cockayne }@cs.nps.navy.mil

ABSTRACT
The Omni-Directional Treadmill (ODT) is a revolutionary device for locomotion in large-scale virtual environments. The device allows its user to walk or jog in any direction of travel. It is the third generation in a series of devices built for this purpose for the U.S. Army's Dismounted Infantry Training Program. We first describe the device in terms of its construction and operating characteristics. We then report on an analysis consisting of a series of locomotion and maneuvering tasks on the ODT. We observed user motions and system responses to those motions from the perspective of the user. Each task is described in terms of what causes certain motions to trigger unpredictable responses causing loss of balance or at least causing the user to become consciously aware of their movements. We conclude that the two primary shortcomings in the ODT are its tracking system and dampening mechanism on the treads.

Keywords
Virtual reality, virtual environments, exertion devices, input devices, locomotion, maneuvering

INTRODUCTION
One of the major problem areas in current virtual environment (VE) research concerns difficulties associated with movement through large-scale virtual spaces. Whenever a small physical space, as is typical of most laboratories, must be mapped to a much larger virtual space (often many orders of magnitude larger), a mechanism must be provided to allow users to move over large distances in the virtual world without actually moving far in the physical space. We refer to this mechanism as *locomotion*.* Furthermore, there must also be a mechanism to facilitate *maneuvering*, which involves fine movements over short distances such as side-stepping or turning in place.

The requirement for locomotion in large-scale virtual worlds raises the issue of how best to accomplish this task. The National Research Council recently put forth the following recommendation [3]:

> "The committee recommends support of research on visual displays, haptic interfaces, and locomotion interfaces…"

Thus far, there have been two primary approaches to this problem; abstractions or metaphors for virtual locomotion [1], and methods for natural locomotion; walking, running, crawling, etc. There are strong arguments for both of these approaches most of which are dependent on other task demands on the user. In instances where there is a need to simulate the exertion associated with locomotion† or if the user's hands are busy, the most obvious solution, if it could be proven feasible, would be to use natural forms of human locomotion to move through the virtual world. This has not been practical until recently with the development of specialized locomotion devices.

While there clearly is progress being made on engineering solutions to this problem, to date, there has been no investigation of the human factors issues associated with these devices. There are two primary criteria for a locomotion device or technique; accuracy and control, and cognitive demand (attention). These are the characteristics of locomotion in the physical world whether it be by natural methods such as walking, or man-made methods such as driving a car.

The ideal locomotion device or technique would facilitate rapid movement over vast distances without sacrificing accuracy or control [5] and would be so transparent to the user that it would become a completely automatic task, as opposed to a conscious task [6]. We cannot necessarily

*. as opposed to *navigation* which implies not only the motor elements associated with movement but also the cognitive elements of *wayfinding*.

†. common in many training applications

equate the notion of “naturalness” with this phenomenon. It is clear that unnatural (or learned) actions can become automatic with practice; e.g. playing the piano, riding a bike. However, within the context of locomotion devices for virtual worlds, particularly for training applications, we suggest that locomotion must be transparent even for novice users. We must assume that users have to be trained for some primary task other than locomotion and that expending time and effort training to use the system is unacceptable. Therefore, we will consider mainly first-time users but will also report on adaptation over time.

The United States military has aggressively supported the development of safer, less expensive, environmentally conscious training systems for its personnel. In recent years, this initiative has been supported through the development and deployment of systems based on the SIMNET and DIS* network protocols. The large majority of these systems model vehicles such as tanks and aircraft and allow them to interact in a shared, networked VE. Traditional training methods with these types of vehicles are not only expensive to conduct, but are often damaging to the environment and dangerous to participants and observers.

The next step in the evolution of these systems requires the integration of humans into shared, DIS-based VEs. Current military simulations are inaccurate as they do not account for dismounted infantry in any way. Consequently, the dismounted infantry are unable to train in conjunction with large equipment with which they must operate in real world situations.

BIPEDAL LOCOMOTION DEVICES

Our research group has been tasked with the integration of three successive generations of locomotion devices into NPSNET, our DIS-compliant simulation system. The first two generations of locomotion devices were designed and built by Sarcos Corporation; the Uniport and the Treadport. Although there have been other locomotion devices developed [4], we will focus only on the three generations developed for the U.S. Army Dismounted Infantry Training Program of which we have first-hand knowledge.

The Uniport (see Figure 1) was the first device built for lower body locomotion and exertion. The system was integrated into NPSNET and displayed in 1994. It was part of the I-Port system which included upper body mechanical tracking. The Uniport operates in a similar fashion to a unicycle. The user pedals to simulate walking or running. The metaphor of the Uniport is that of cycling rather than natural bipedal locomotion. The Uniport allows its user to move forward or backward, turn left or right, and experience force feedback when going up or down inclines. The direction of motion is controlled by the Uniport’s seat. Movement direction is specified by the twist of the seat, controlled by the user’s waist and thighs.

*. Distributed Interactive Simulation

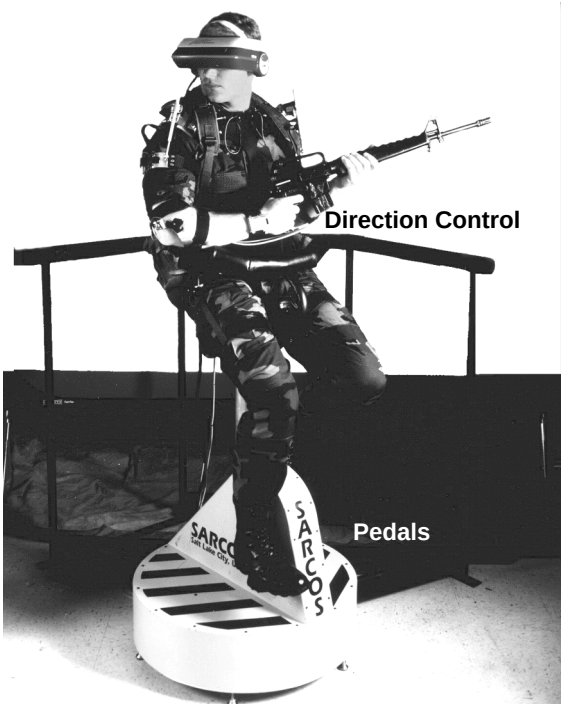

Figure 1. Soldier on UniPort

While the Uniport does map user exertion to movement in the environment, it is cumbersome in its methods of maneuvering over short distances. Small motions such as sidestepping or small rotations of the body are difficult if not impossible to perform. Furthermore, the direction of motion is awkward (and uncomfortable) to control.

The Treadport was fielded in 1995 and was designed to solve some of the problems experienced on the Uniport. In particular, the Treadport (see Figure 2) is based on a standard treadmill with the user being monitored and constrained from behind via a mechanical attachment to the user’s waist. In addition to giving feedback to the system, the mechanical attachment is used to provide force-feedback to the user. This system provides similar features to the Uniport, the main difference being that the Treadport allows the user to actually walk or jog instead of pedaling. Movement direction is specified by turning the waist which shifts the visual displays appropriately. But physical movement is constrained to one direction.

The development of the Treadport seems to be an effort motivated largely by a desire for more natural locomotion (a trend we will see repeated in the Omni-Directional Treadmill). Replacing pedaling with walking, control of direction is again approximated due to constraints of the system. Small, local movements are awkward if not in the direction of the treadmill.

THE ODT

The most recent development, and the focus of this paper, is the Omni-Directional Treadmill (ODT) (see Figure 3). The ODT is a revolutionary locomotion device that enables bipe-

Figure 2. Soldier on TreadPort Device

dal locomotion in *any* direction of travel. From an engineering perspective, this device is a major breakthrough. However, our purpose is to investigate this device from a human factors perspective to determine if it achieves the performance levels necessary for widespread use.

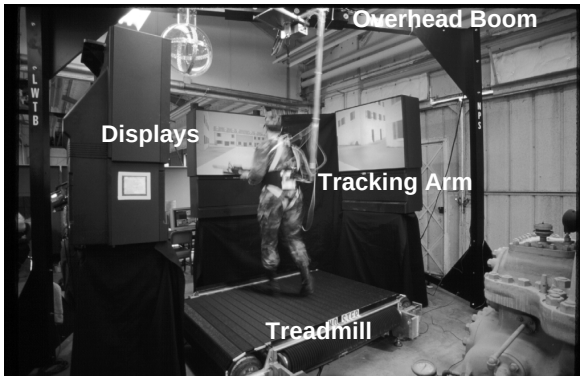

Figure 3. Soldier on the Omni-Directional Treadmill

The basic principle of the ODT consists of two perpendicular treadmills, one inside of the other (see Figure 4). The top belt, comprised of an array of freely rotating rollers (1) lies atop a second, orthogonally oriented belt also comprised of rollers (3). Each belt is made from approximately 3400 separate rollers, woven together into a mechanical fabric. The top rollers (2) are made to translate in unison by the action of a dedicated servo motor that acts upon the entire continuous belt. The top rollers are made to rotate (1) through contact with the lower moving belt. Essentially, the top belt is made to be mechanically transparent to the lower belt. The lower belt rollers are each housed in a cradle (4) that permits rotation yet also permits resting the assembly on a low fric-

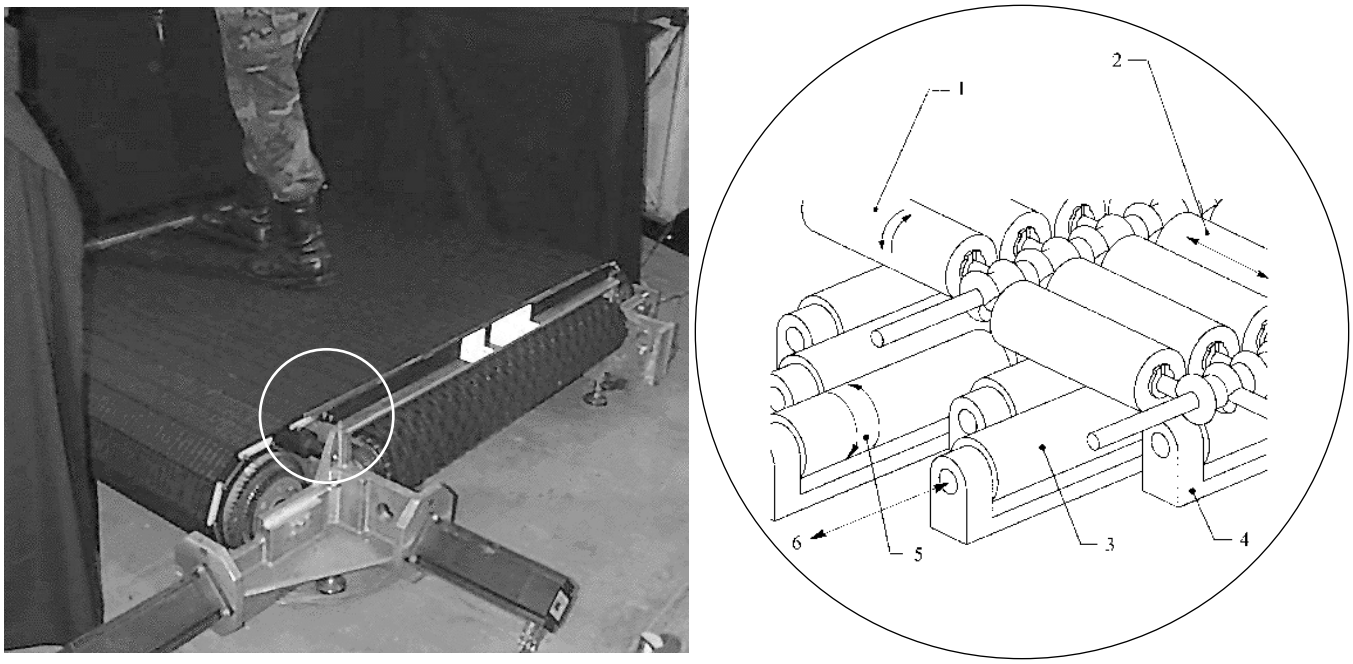

Figure 4.The basic principle of the omni-directional surface motion in a detailed view of roller belt interaction

tion support surface. The lower rollers are free to rotate (5) and serve as a bearing surface for the linear motion of the top belt. Translation of the lower cradles (6) is affected by a second dedicated servo motor, that causes all the cradle rollers of the lower belt to continuously move. Each belt is controlled by its own servo motor. Unlike a typical exercise treadmill that passively rotates as the users moves on its surface, the ODT actively responds to the user's motions using its servo motors.

Seen from a top-down view (see Figure 5), the user is walking towards the bottom left of the active surface. Diagonal movement is accomplished by simultaneous movement of both the lower roller belt and the upper roller belt. During diagonal motion, each top belt roller is both translating and rotating. With respect to the drawing, a flat object (like a shoe) in contact with the top of the rollers will be carried to the right due to the rollers' linear contribution, *and* it will be carried upward due to the rotary contribution. These two motions occur simultaneously. They affect the user as a vector sum. For example, the top belt moving at 1 m/sec in the X direction and rollers causing motion at 1 m/sec in the Y direction will give a vector sum motion of

$$\sqrt{(1 + 1)} = 1.414 \text{ m/sec at } 45°$$

Because both the top roller belt and the bottom roller belt are bi-directional, all planar vectors may be generated. The surface moves in any direction, allowing the user to walk in a circle if desired. When the user is moving, the entire active surface area is in motion. The user's feet contact multiple active rollers, thus creating the effect of a flat and uniform surface.

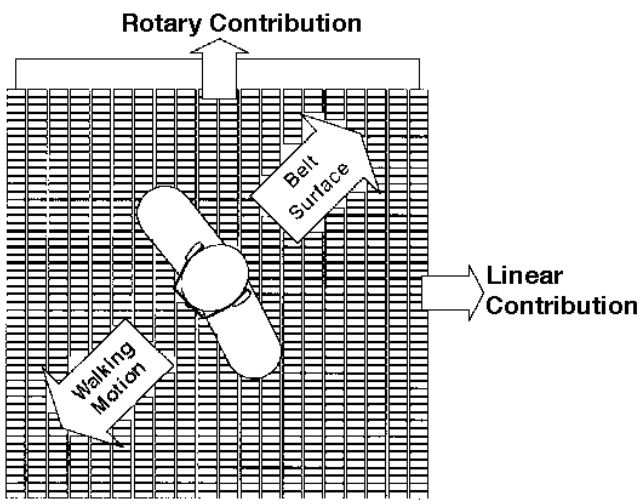

Figure 5. Treads on Omni-Directional Treadmill

The maximum velocity of the user (relative to the treadmill, not the ground) is 6mph (3m/sec). In terms of its physical characteristics, the ODT platform is 18" high (0.46m), 87" in length (2.21m), and 79" wide (2.01m) with an active surface of 50" x 50" (1.3m x 1.3m).

We should also note that the ODT is an extremely loud device. We did not take decibel readings during its operation but conversation between any persons near the ODT platform is not possible without shouting.

The Omni-Directional Treadmill, as shown in Figure 3, consists of the treadmill and a mechanical tracking arm that extends down from an overhead boom and attaches to the user's lower back. The tracking arm is attached tightly to the user's back via a harness. It must be held tightly to the back so that there can be no relative motion between the tracking arm and the user. There is also a safety mechanism that connects the user to the boom with a nylon strap. If the user loses control or is thrown off balance, a kill switch is triggered and the ODT is immediately halted. The harness will not allow the user to fall.

The tracking arm is used to locate the user's position and orientation relative to the platform so that the servo motors can be used to drive the user back to the center of the treadmill. As the user moves in any direction, and thereby begins to step off of the active surface, the ODT must always bring the user back to the center of the active surface to avoid walking over the edge of the platform. Herein lies the most important aspect of the ODT in terms of human locomotion and usability. There are two fundamental types of movement associated with the use of the ODT:

- **User initiated movement**: The user attempts to walk from the ODT center to some position.
- **System initiated movement**: The ODT attempts to return the user to its center.

As the user moves off-center and the ODT responds with a centering reaction, the ground under the user (the platform) must move accordingly. The question is whether or not this motion is noticeable and if it is noticeable, can it be remedied and how?

Standing at its center, there is approximately 1.27 meters of active surface in any direction to move on. As the system tracks the user's position on its surface, that information is passed to an algorithm* that determines how to adjust the treads in order to re-center the user. The lag inherent in this loop must be extremely low. If the user accelerates quickly from a rest state, the ODT has very little time to re-center in order to keep the user from running off the platform. Furthermore, if the user should change direction during this response time, the ODT must then determine what the best vector of return is to bring the user to center.

This problem is what makes the issue of bipedal locomotion simulation so complex. Not only is precise tracking required, but the related communications, filtering, calculated response, and actual response must occur correctly

*. The specifics of this algorithm are proprietary to Virtual Space Devices Inc.

with essentially no lag in order to adequately simulate the real world.

We are not aware of any research that has ever been published involving the usability of any of these three devices. Each of these systems has been few in number causing accessibility to be extremely limited. The intention of this analysis was to provide some guidance in the development process of the ODT and any devices that may follow it. In much the same way as the HCI community has strived to make usability engineering a part of the interactive software development process, we are endeavoring to make usability engineering a part of the VE software and hardware development process.

LOCOMOTION TASKS ON THE ODT

In the limited time allowed us for completing this analysis, our intent was to investigate a set of locomotion tasks on the ODT that represent a subset of locomotion tasks required of such a device. Specifically, we asked if upright locomotion on the ODT is the same as upright locomotion on the ground and if not, in what ways do they differ?

We videotaped a user performing a number of locomotion tasks on the ODT. The user performed each task a number of times so that we could assess improvements in performance due to adaptation to movement on the device. The video includes both the user's full body and a close-up view of the user's lower legs and feet. The user's feet and legs were exposed as much as possible in order to detect muscle flexion that might not be noticeable otherwise. When the two videotapes are synchronized, we are able to see a highly accurate representation of locomotion task performance on the ODT. The results reported here are based on review of these videotapes and participant debriefing.

The Tasks

For this analysis, we describe locomotion tasks in terms of four primary factors.

- **Velocity**: Rest, Walk, or Jog. This defines the approximate relative velocity of the user when not accelerating or decelerating. Running is not possible on the ODT, nor is crawling or kneeling.
- **Transition**: Accelerate or Decelerate. As will become evident in the analysis, the rate of acceleration or deceleration is also a critical factor.
- **Movement Direction**: Forward or Backward. Side-stepping is considered a maneuvering task.
- **Direction Change**: Straight or Turn. This describes if a direction change takes place during a transition or at constant velocity.

Although there certainly are other factors associated with locomotion, these will best allow us to describe abnormalities in locomotion on the ODT as compared to natural locomotion.

Locomotion Performance Characteristics

We will describe each locomotion task in terms of motion at constant velocity and transitions between velocity states and follow each with a detailed description of the performance of that task and its variations on the ODT.

Figure 6A shows the ideal centering situation where the user is facing forward on a vector (V) directly in line with the centering vector (C). The centering vector represents the vector the ODT will follow to bring the user back to the center of the platform. Figure 6B shows a situation where the user's forward direction has become misaligned with the centering vector. While loss of balance can occur in all situations, those where the forward and centering vectors are misaligned are most likely to cause the user to stumble. We will describe several instances where this can occur.

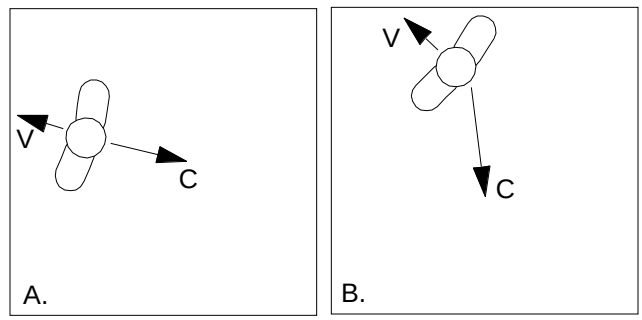

Figure 6. Centering on the ODT platform

Accelerate to Walk/Jog from Rest

Starting from a rest state and centered on the ODT platform, the user accelerates forward to a walk in a straight line of motion. As a first-time user, this is an awkward but not difficult task to perform. In these tasks, the forward and centering vectors are always aligned and remain so throughout execution. We believe motion abnormalities are attributable to the user's unfamiliarity with the "slipperiness" of the surface. This may cause some apprehension. But with very few repetitions, the user is fairly comfortable with this task. We noticed that the foot placements of the user were extremely irregular at the beginning of the trials but improved greatly over time. Normally fluid leg motion was instead replaced by unsteady movement of the knees and feet. With practice, the reactions of the ODT became more predictable and the motion smoothed significantly but was still not completely regular as it would be on a flat, steady surface.

When the user walks backwards, the movement can only be described as a stumble. However, these motions are among the most improved over time. Motion is not significantly different when the user accelerates to a jog instead of a walk as long as the acceleration is not excessively fast.

When the user initiates a shallow turn during acceleration, the awkwardness is somewhat worse. To alleviate this problem, the user walks with a wider stance than would be typical of such a turn on a steady surface. The unsteady nature of the motion was worsened by the magnitude of the turn.

Figure 7A shows how a user might initiate motions causing the forward and centering vectors to be misaligned. The user

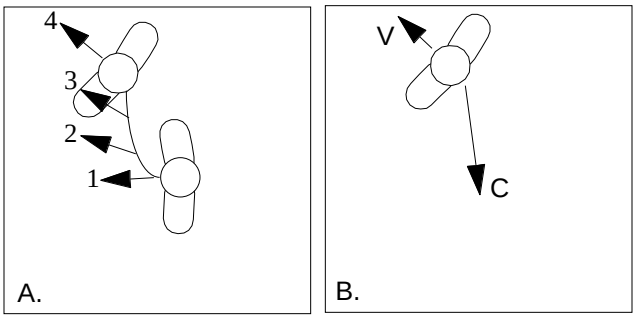

Figure 7. Misaligning the forward and centering vectors

steps off of center (1) and rapidly rotates the body to the right (4). Since the system cannot respond to this motion instantaneously so that the user would be recentered at every step (2-3), the user is allowed to get to position 4 where the centering reaction of the ODT is sure to cause a loss of balance. Furthermore, the greater the displacement from center, the faster the ODT must return the user to center. This can only make the situation worse. Ideally, the distance between each of the steps in Figure 7A would be negligible. However, this would require a system with essentially no latency whatsoever.

Decelerate to Rest from Walk/Jog
From a straight, steady walking pace, the user decelerates to a stop. This is a much more difficult task as compared to acceleration. As the user brings the feet together to stop motion, the treads are not able to respond immediately and consequently, they rotate past the stopping point causing the user to stumble forward. The differences between deceleration and acceleration seem to lie in the fact that "stop" is a rigid endpoint in task completion while "walk" is flexible. As the user accelerates to a walk, if the ODT does not respond exactly as expected, the user adapts to whatever the response is and eventually finds a comfortable walking pace. The opposite, however, cannot be approximated. As the user slows from a walk to a stop, the ODT cannot halt its rotations as fast as the user wants to stop causing the surface under the user to over-rotate too far backward. This, in turn, causes the user to stumble forward. While the forward and centering vectors remain aligned in this case, the inability of the treads to stop their rotations at precisely the same time as the user causes a different, but nonetheless significant, stumble.

This problem is significantly worse when the user comes to a stop from a jog where the velocity is higher. The amount of over-rotation of the tread is proportionally greater. Due to the naturally slower pace of backward motion versus forward motion, stopping from a backward walk is no more difficult than a forward walk.

If the user is in the midst of a turn while decelerating, the ODT's reactive motion seems to have its worst effects. Because the forward and centering vectors are most likely misaligned, the vector of motion that the ODT must use to bring the user back to center will cause the user to lose balance. In the case shown in Figures 6 and 7, as the ODT recenters the user along vector C, the user will tend to fall to the right as the ground surface slips away to the left.

Accelerate to Jog from Walk
If the direction of motion remains constant, this is not a difficult task even for a first-time user. Since the user is in motion already, adaptation to the ODT's response is a relatively trivial and automatic task. If a turn is executed during acceleration, the forward and centering vectors can again become misaligned causing some stumbling. But this seems to require a significantly fast acceleration rate and is an unusual event.

Decelerate to Walk from Jog
This is a very similar task to its acceleration counterpart. Because the user is in motion, the reaction of the ODT can be accounted for by adjusting foot placements. Experienced users show no signs of conscious effort in adapting to this motion and balance is nearly always maintained. As with acceleration, quick turns during deceleration will cause the centering algorithm to throw the user off balance.

Walk or Jog
If there is no acceleration or deceleration and the user is not turning, there are no noticeable problems even in first-time users. The motion of the user is relatively predictable and consequently, the reactive motion of the ODT is equally predictable. If turns are made slowly, there seems to be no effect on the motion at all. If the turns are made more quickly, balance problems can resurface but they are not common in these types of movements.

Maneuvering Performance Characteristics
Maneuvering tasks are specifically separated from locomotion because their associated movements are significantly different from those required for locomotion. Movements associated with locomotion tend to have coherence such that there is some level of predictability involved. Maneuvering, on the other hand, is largely discrete, separated motions over short distances. Research in locomotion in virtual worlds often neglects to include maneuvering as an important aspect, yet if we think about the movements we make in a typical real environment, they are mostly maneuvering over short distances rather than coarse distance traversing movements.

Turning in Place
Without stepping away from the center of the platform, the user turns in place in either direction. The feet must be lifted but no steps are taken. The way the harness is fit on the user with the tracking arm extending away from the body, turning in place is sensed as a small movement and the treads attempt to recenter the user even though any movement that has taken place is minute. These small movements are very noticeable to the user and make this task a difficult one to perform.

Side-Stepping
For the first-time user, side-stepping was a completely awkward movement. In fact, a side-stepping task was the only instance in our study to cause enough of a stumble to trigger the kill switch. This seems to be because the motions associated with side-stepping and losing balance in that direction are extremely difficult to recover from. The need to cross the legs when side-stepping leaves the user in a very vulnerable position. With practice, the user begins to take very small steps and places the feet in a very deliberate fashion. The very nature of this motion implies that the forward and centering vectors will *always* be misaligned.

Tilting Upper Body Without Foot Movement
In its current configuration, the user cannot bend down or crouch in any way. This task describes a reasonable approximation of this; bending at the waist either forward or to either side. As with turning in place, the tracking system often senses movement when there is none intended and consequently recenters the user. Maintaining balance in this case is less difficult than in the turning in place task since the feet are stable on the platform. It is the platform that is unstable.

Attention Demands
We observed three users on the ODT over a prolonged period of time. In all cases, they were able to adapt their movement so that responses from the ODT would be predictable. As the designer of the ODT stated:

> "The user can run on the device as long as they are willing to learn [how the device works.]" [2]

This is an important factor to consider. Users who spend enough time on the ODT to learn what it can and can't do are able to move quite effortlessly on it without loss of balance or exhibiting abnormal motions. As users adapt to the system and become more proficient on it, it would seem that they are not so much learning how to *handle* unpredictable responses of the ODT as they are learning how to *avoid* unpredictable responses. They do this by eliminating all fast motions. They do not accelerate or decelerate quickly. They turn slowly. If they have to make a tight turn, they will either stop altogether and turn in place or they will at least slow down to an easy pace so that the turn can be made slowly. Most maneuvering tasks are avoided altogether. To thoroughly assess the attention demands of these tasks, a re-evaluation should take place where the user is given a cognitive distraction task unrelated to locomotion while on the ODT.

The question would seem to be whether or not this sort of adaptation is an acceptable artifact of using the ODT or if it is not. For many training tasks, the use of the ODT may distort the user's perception of self movement such that a reverse training effect may result. After training extensively on the ODT, a user may have to readapt to real motion that is not constrained by the limitations of the ODT. This issue will demand further study.

DISCUSSION
It is clear that while the ODT has broken a significant barrier in locomotion techniques for VEs, to say that it is identical to natural locomotion would be misleading. Users of the ODT must learn how to walk on the ODT. It is readily apparent that it is not the same as the real world. Nevertheless, the ODT does provide functionality never before available. The issue is how to improve it to close the gap between virtual and real locomotion and maneuvering.

On the basis of our analysis, we believe the primary problem with the ODT lies in the centering algorithm and its two primary components, the tracking system and the dampening of the treads. The worst cases of stumbling occurred when the user intended to be stopped but the system had not yet settled to rest. The dampening of the treads and rollers on the ODT do not respond quickly enough to satisfy this requirement.

As the user makes small movements in the near vicinity of center such as those typical of maneuvering tasks, the ODT should not make any effort to recenter. In other words, there should be a relatively large "sweet spot" around the center where the user can move freely with no reaction from the system. As the user moves out of the sweet spot, the system should react in proportion to how fast and far the user is moving. Although we do not know the specifics of the algorithm used, we believe that this is precisely what the ODT does. However, the magnitude of these reactions seems to be problematic. There is a very real danger that if the system does not respond quickly to user motions, the user could walk off the edge of the platform. Still, the velocity with which the ODT recenters its user when only a very short distance off-center seems to be too large. One solution might be to enlarge the operating surface area. If the platform could be made very large (impractical as this may be), the algorithm would not have to respond so quickly to user motions. As the user walked out from center, the system could slowly move them back in while they were moving. This is similar to rendering techniques that lower resolution while an object is moving and raise it again only when it is stopped.

Our observations indicate that some of the worst cases of stumbling on the ODT arise from either system or user induced side-step motion. When the treads over-rotate either forward or backward as the user is facing in the centering direction, the user places a foot either in front of or behind the body to stop the fall. This is a very similar reflex response to tripping. However, if a turn is in progress and the user is not facing in the centering direction, a sideways vector is introduced causing the user to have to execute an awkward side-stepping motion to avoid falling to that side. Furthermore, there is an added component to this problem

making it by far the most significant error we encountered. As the user steps to the side to avoid falling over, further motion in that direction is sensed by the tracker. The ODT responds by pulling the treads even more in the direction of the fall. There is consequently an additive effect of the error that can easily result in the user having to pick up the feet so as to trip the kill switch and shut down the system.

The way the tracking system is physically connected to the user causes the center of mass of the user's body to change somewhat. We noticed this particularly when the user would turn in place. The torso would often sway back and forth as the user adjusted weight over the center of mass.

Another important issue is that of visual feedback that correctly corresponds to the motion of the user. The optical flow presented by the visual displays must coincide with the motion of the user. As the intent is to create a sense of presence with natural locomotion while also causing exertion similar to that which would be experienced in a real exercise, the physical effort and mental conception of distance must coincide. This is not possible without correct calibration of the visual display to the ODT device [7]. Furthermore, while the ODT certainly demands physical effort on the part of the user to move about the virtual space, we have no idea if this is a reasonable approximation or even if exertion is an important factor to preserve at all. It has been suggested that exertion is an important element in distance estimation. Yet again, there is no evidence to support this claim. Intuitively, we believe this to be true, but it will require further study for verification.

Current spatial tracking technology is mediocre at best. All methods, magnetic, mechanical, optical, inertial, have major drawbacks when the requirement is for high accuracy and low latency. We believe that this is a fundamental flaw in the ODT, and that it will cause the most problems for locomotion devices for the foreseeable future. The majority of problems we observed in the ODT relate directly to how the system senses its user and how the system's response affects the way in which the corrections occur.

CONCLUSIONS

Our sense of balance is very delicate and we are quick to notice when we have lost it or even if there is a danger of losing it. Locomotion, while in an unbalanced or susceptible state, can no longer be an automatic task as it would be under normal circumstances. Walking has been described as "controlled falling". Control is made difficult or even impossible if the surface of support is unsteady.

We believe that as the ODT is refined based on this and other studies, and as tracking technology improves, the usability of the device will also improve. The National Research Council working group stated that, "there seems to be no fundamental obstacles to the creation of such devices." [3]. Our conclusions agree with this statement. The designers of the ODT have planned to incorporate a force feedback mechanism that may solve some of the problems associated with dampening of the treads. This, along with a better tracking system and fine tuning of the centering algorithm may result in great improvements in the usability of the device. We are optimistic that the ODT will be a useful device for locomotion in large-scale virtual worlds in the near future.

ACKNOWLEDGEMENTS

This research is funded by DARPA/Biomedical Technology. The authors would like to thank David Carmein, Paul Barham, and Russell Storms for their assistance and cooperation.

REFERENCES

1. Bowman, D., D. Koller, and L. Hodges. *Travel in Immersive Virtual Environments: An Evaluation of Viewpoint Motion Control Techniques*. in *Virtual Reality Annual International Symposium (VRAIS)*. 1997. Albuquerque, NM: IEEE Computer Society Press.

2. Carmein, D, Virtual Space Devices Inc., Personal conversation, September, 1996.

3. Durlach, N. and A. Mavor, eds. *Virtual Reality: Scientific and Technological Challenges.*. 1995, National Academy Press: Washington, D.C.

4. Iwata, H. and T. Fujii. *Virtual Perambulator: A Novel Interface Device for Locomotion in Virtual Environments*. in *VRAIS '96*. 1996: IEEE.

5. Mackinlay, J.D., S.K. Card, and G.G. Robertson, *Rapid Controlled Movement Through a Virtual 3D Workspace.* SIGGRAPH '90, 1990.

6. Posner, M. and C. Snyder, *Attention and Cognitive Control*, in *Information Processing and Cognition: The Loyola Symposium*, R.L. Solso, Editor. 1975, Lawrence Erlbaum Assoc.: New York.

7. Reiser, J., *et al.*, *Calibration of Human Locomotion and Models of Perceptual-Motor Organization.* Journal of Experimental Psychology: Human Perception and Performance, 1995. **21**(3): p. 480-497.

APPENDIX A

Technical Specifications for the ODT

Platform - Active Surface: 50" by 50" (1.27m x 1.27m)
Platform - Height: 18" (0.46m)
Platform - Length: 87" (2.21m)
Platform - Width: 79" (2.01m)
Weight: approx 1200 lbs (544kg)
Motors: DC Servo, 4.6 HP (3.4 Kw)
Materials: Mostly nonmagnetic: nylon, aluminum, stainless steel

U.S. Patent No. 5,562,572; Foreign Patents Pending

For more information contact:

David Carmein

Virtual Space Devices, Inc.
8900 B. Wentworth Ave. So.
Bloomington, MN 55420
+1 612 884 2455
dcarmein@tccn.com